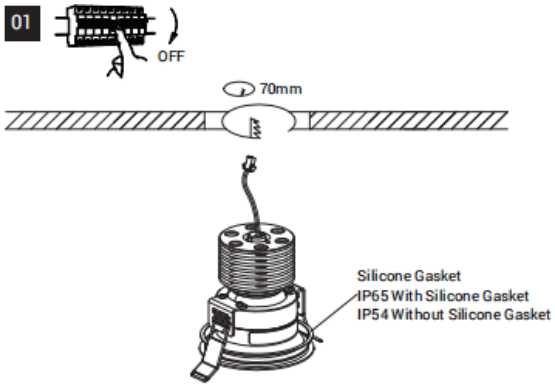

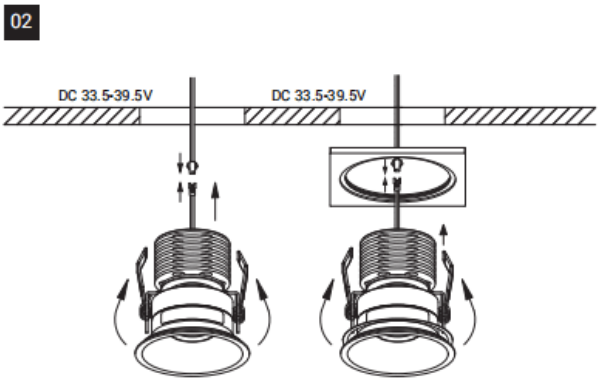

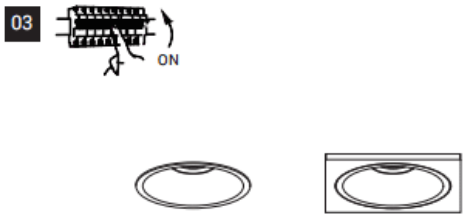

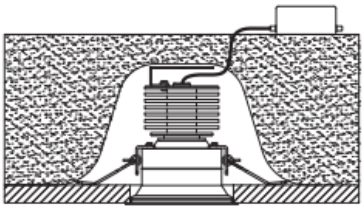
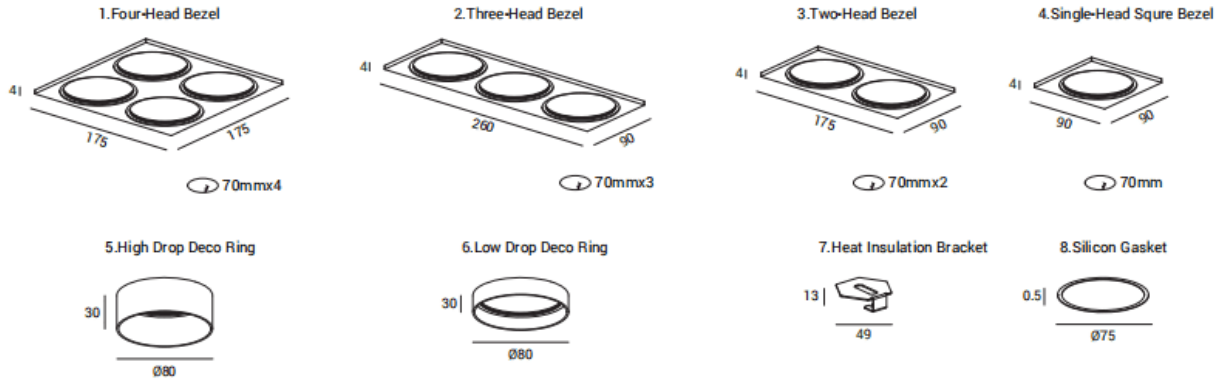
Driver must be installed above insulation.